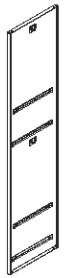

Left Side:1Pc

Right Side:1Pc

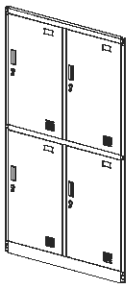

Door Frame:1Pc

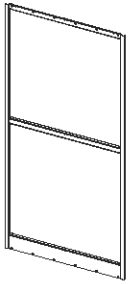

Back Plate:1Pc

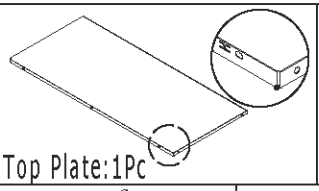

Top Plate:1Pc

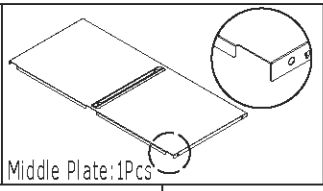

Middle Plate:1Pcs

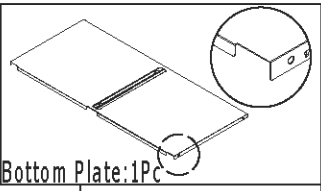

Bottom Plate:1Pc

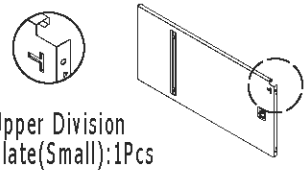

Upper Division Plate(Small):1Pcs

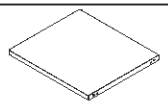

Small Shelves:
Left(Smalt) 2pcs
Right(Big) 2pcs

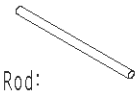

Hanging Rod:
Left(Short)2pc
Right(long)2pc

Self-tapping Screw(5x12): 14Pcs

Key:4 Sets

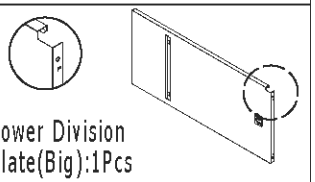

Lower Division Plate(Big):1Pcs

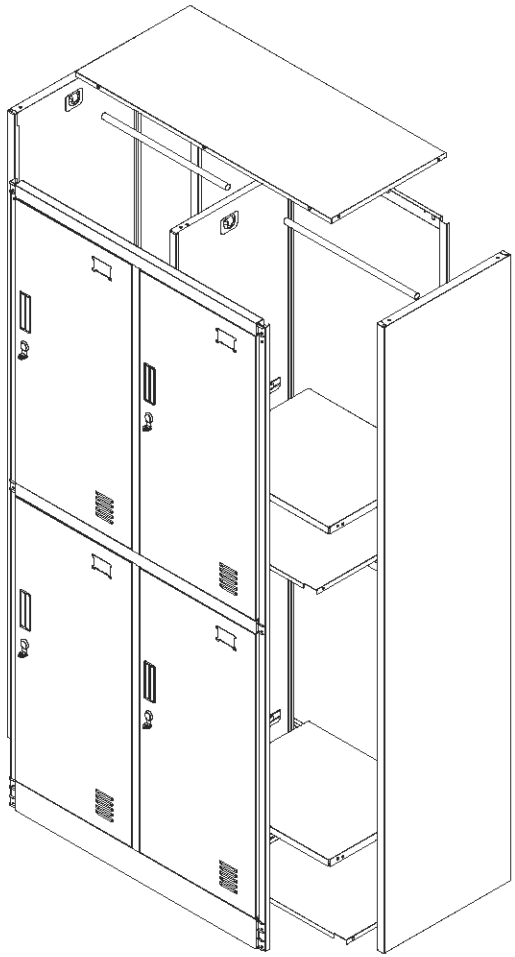

www.hefeng-furniture.com

1

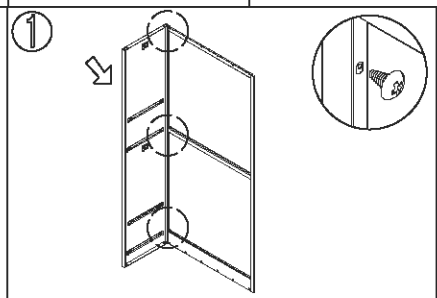

Bolt the left side and back plate with self-tapping screws(5x12)

2

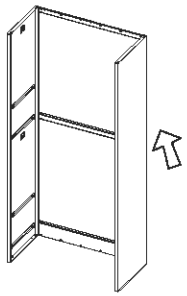

Bolt the right side with back plate in the same way as the first step

3

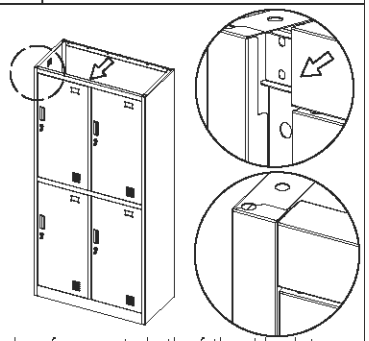

Fix the door frame onto both of the side plates

4

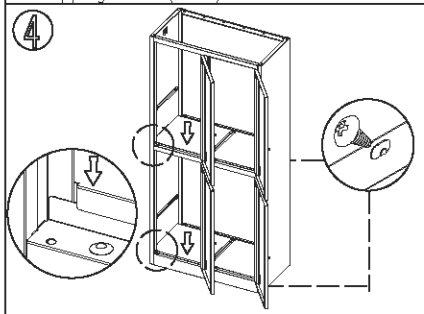

Install the middle plate and bottom plate as the drawing.

5

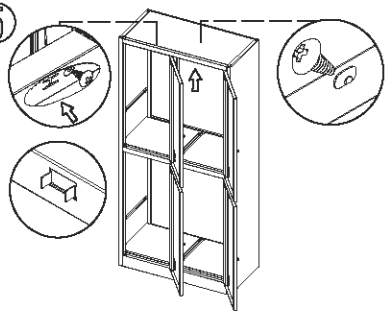

Install the top plate as the drawings.

6

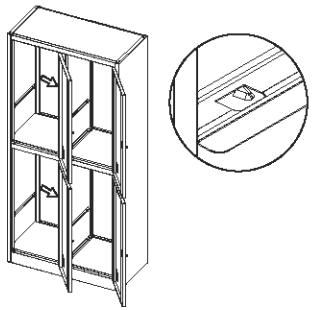

Install the division plate as the drawing

7

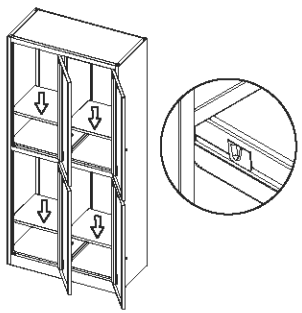

Fix the small shelves as the sign

8

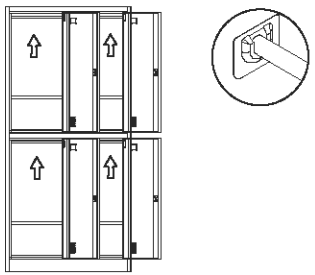

Install the hanging rod.

9

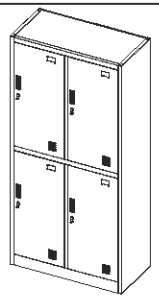

Adjust each parts till fit well after installation