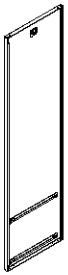

Left
Side Plate:1 Pc

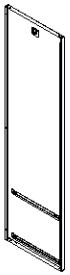

Right
Side Plate:1 Pc

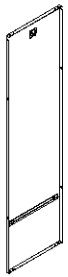

Division Plate:4 Pcs

Door Frame:1 Pc

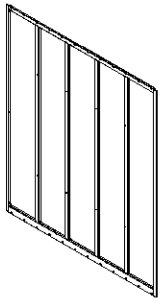

Back Plate:1 Pc

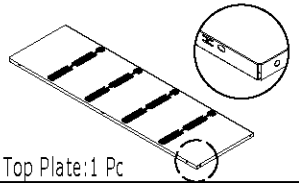

Top Plate:1 Pc

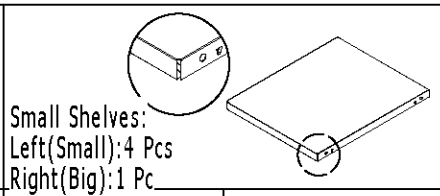

Small Shelves:
Left(Small):4 Pcs
Right(Big):1 Pc

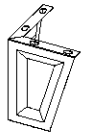

Standing Feet:4 Pcs

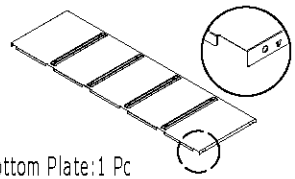

Bottom Plate:1 Pc

Hanging Rod:
Left(Short):4 Pcs
Right(Long):1 Pc

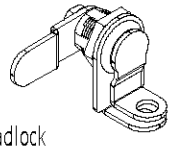

Padlock
Hasp:5 Pcs

Self-tapping
Screw(5x12):54 Pcs

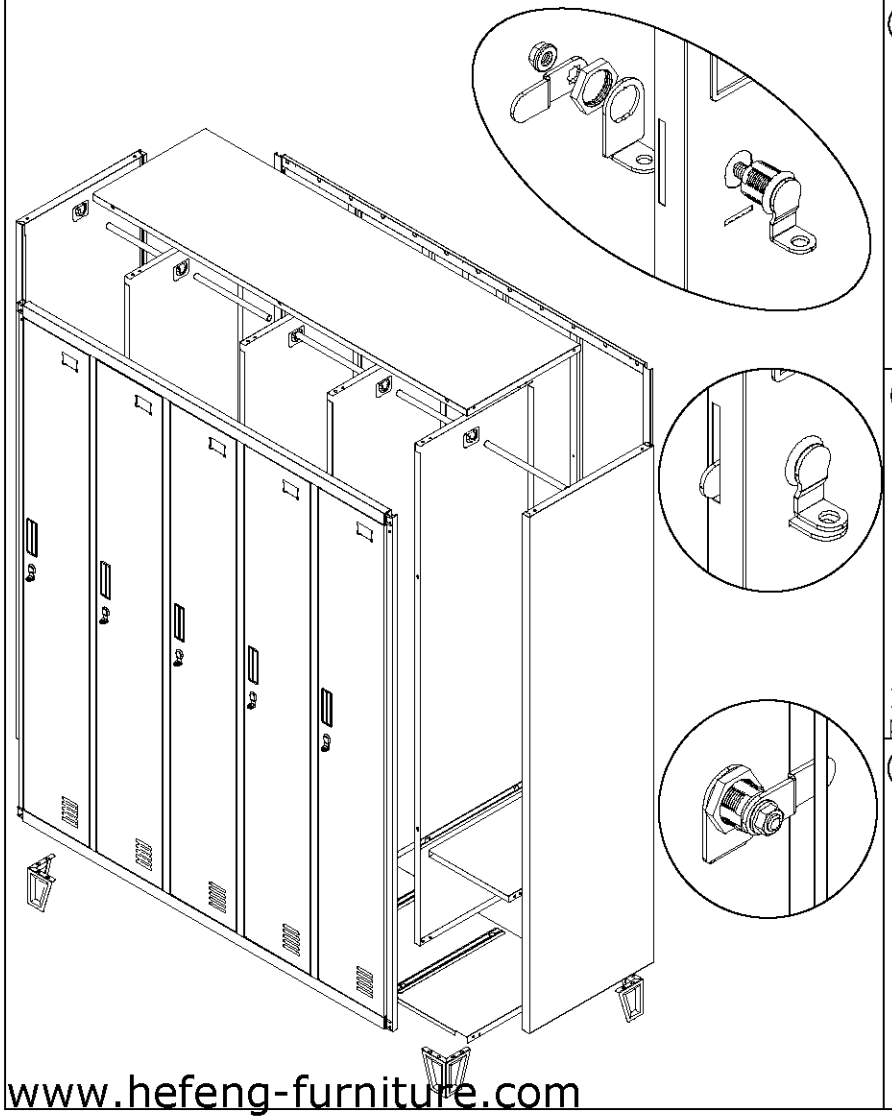

www.hefeng-furniture.com

①

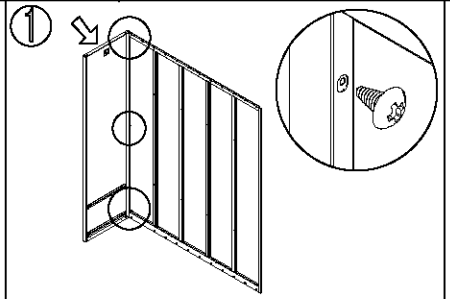

Connect the left side plate with
back plate by self-tapping screws(5x12).

②

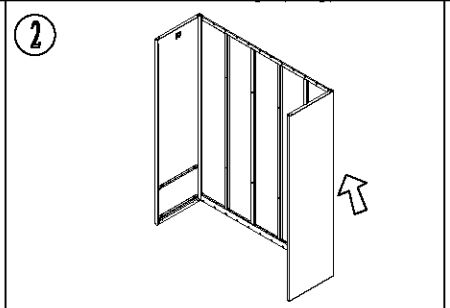

Connect the right side plate with back plate.

③

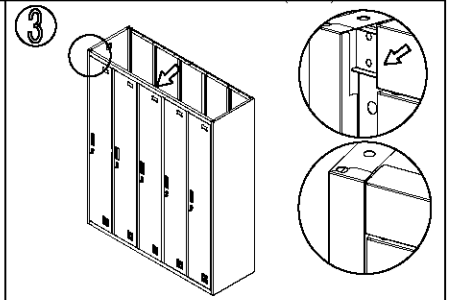

Fix the door frame onto both of the side plates.

④

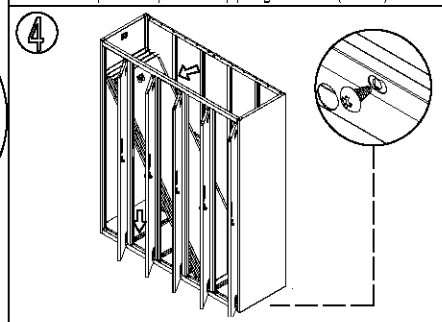

Install the bottom plate firstly, and
put the division plates into the locker.

⑤

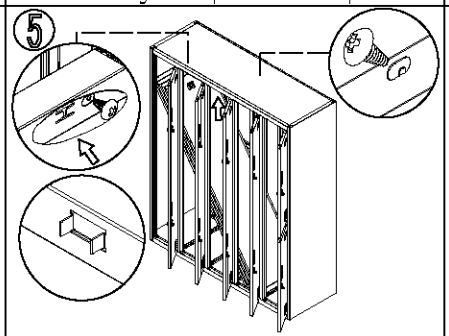

Install the top plate.

⑥

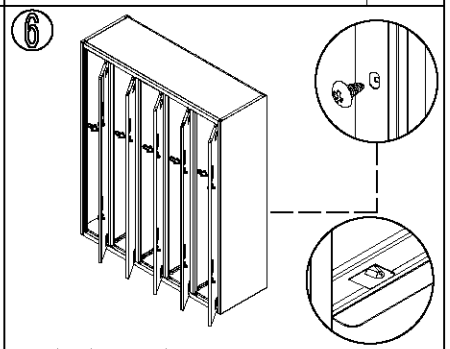

Fix the division plates.

⑦

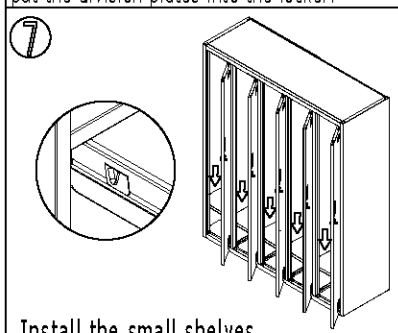

Install the small shelves
as shown in the picture.

⑧

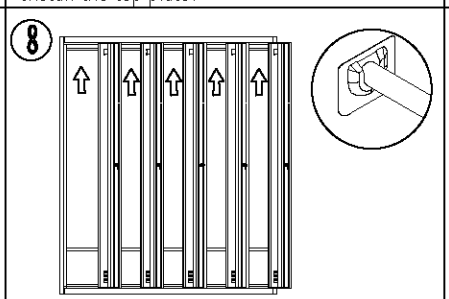

Install the hanging rods.

⑨

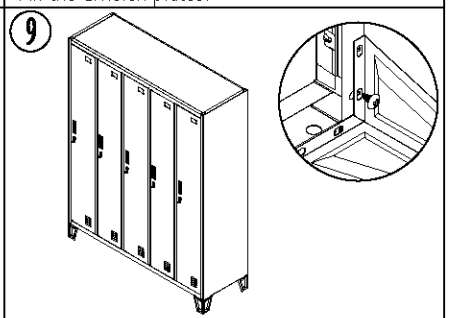

Install the standing feet, and
then adjust each part till fit well.