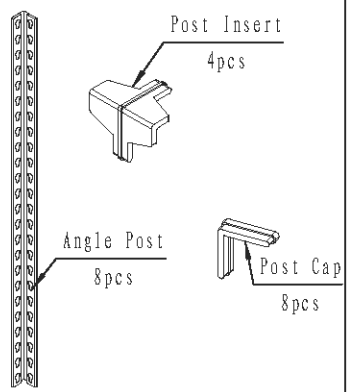

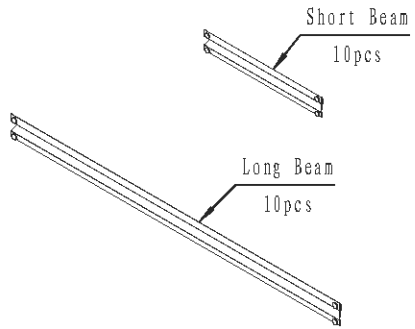

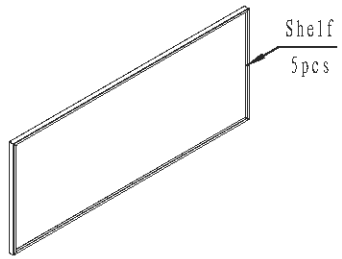

1

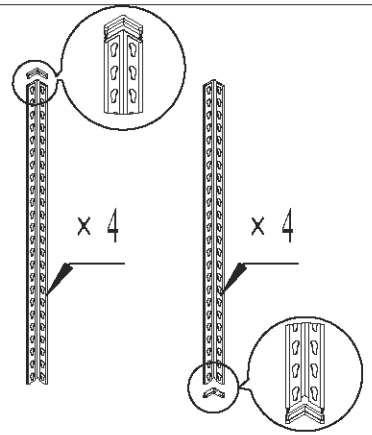

1. Place the post caps at the ends of all angle posts.

2

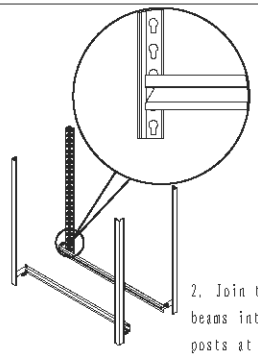

2. Join the long beams into angle posts at the second lowest holes.

3

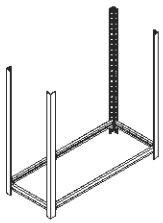

3. Join the short beams into angle posts at the second lowest holes.

4

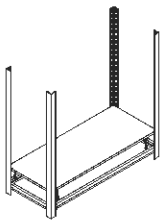

4. Put the shelf onto the fixed short and long beams.

5

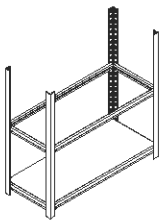

5. Assemble the long and short beams of the second layer.

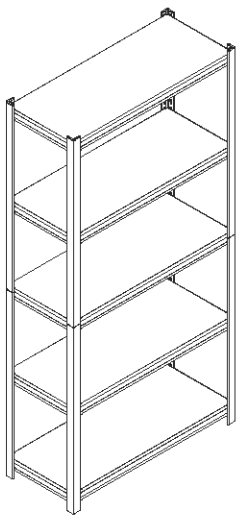

www.hefeng-furniture.com

6

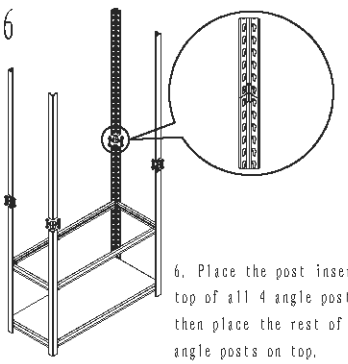

6. Place the post inserts on top of all 4 angle posts and then place the rest of the 4 angle posts on top.

7

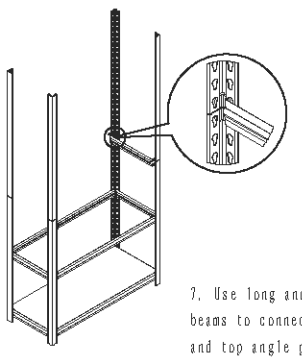

7. Use long and short beams to connect bottom and top angle posts.

8

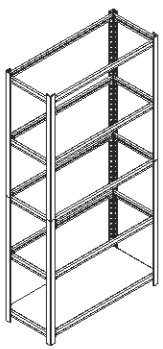

8. Assemble the long and short beams of top two layers.

9

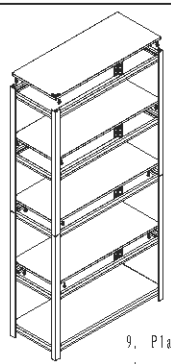

9. Place the other three shelves.