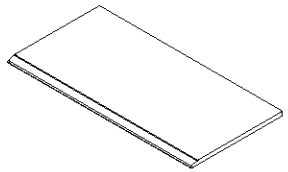

Desk Top:1 Pc

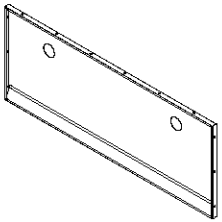

Back Plate:1 Pc

Top Leg:2 Pcs

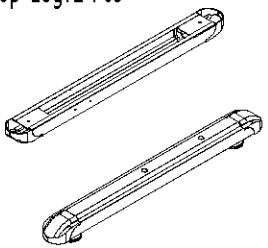

Bottom Leg:2 Pcs

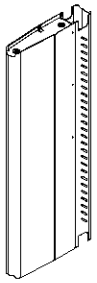

Divider Leg:2 PCS

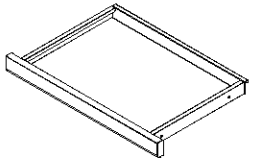

Drawer:2 Pcs

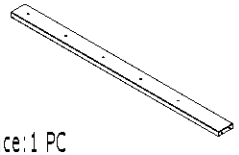

Brace:1 PC

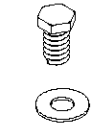

M8-10:8 Pcs

5*12 Self-tapping Screw:28 Pcs

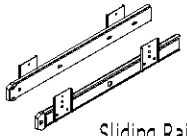

Sliding Rail:2 Pairs

Support Shelf:8 Pcs

M4*8 Screw: 8 Pcs

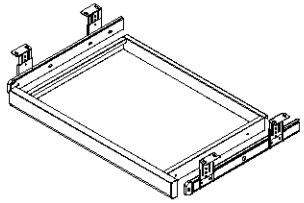

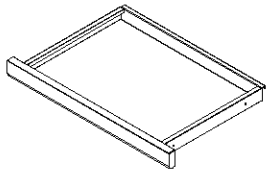

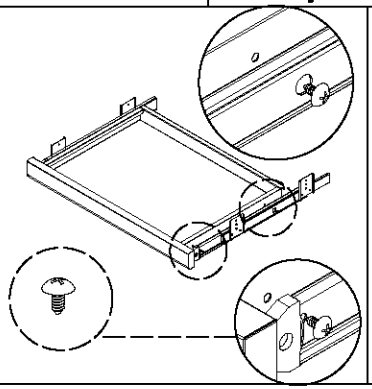

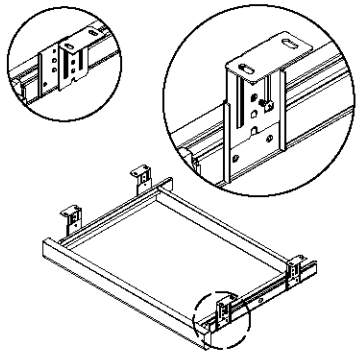

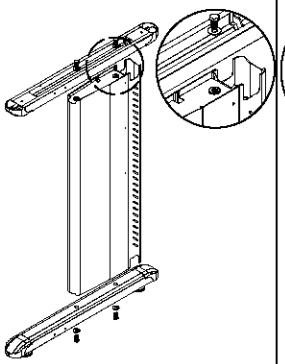

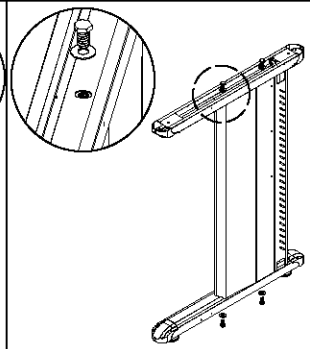

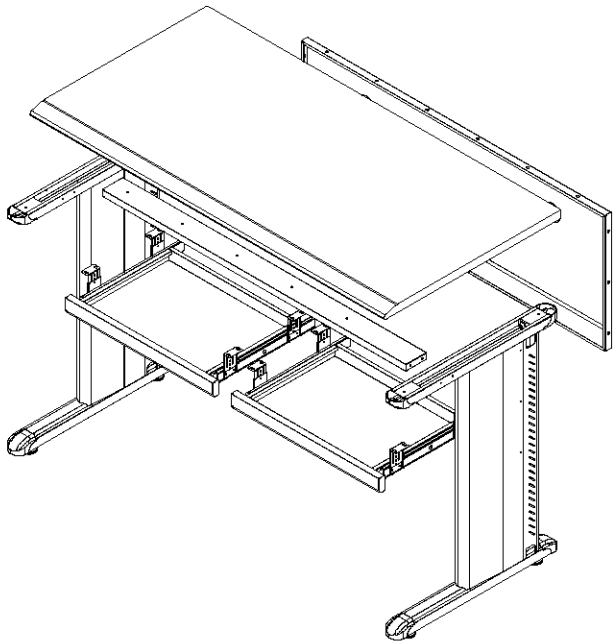

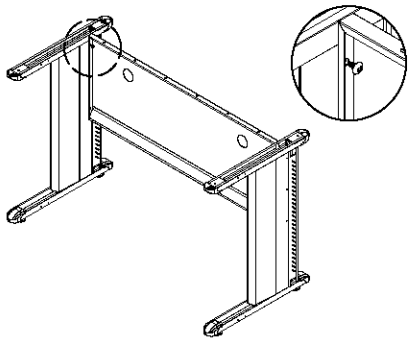

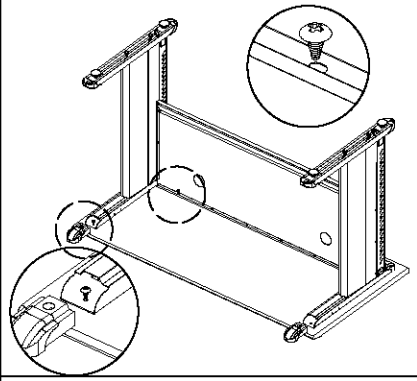

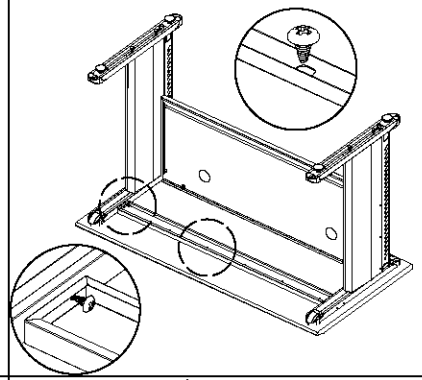

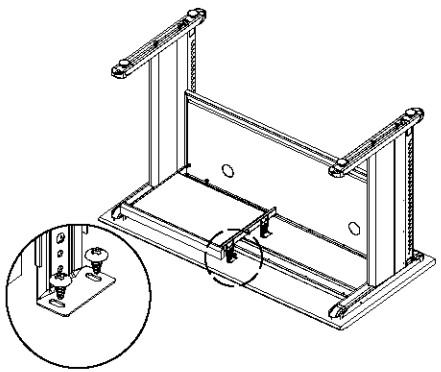

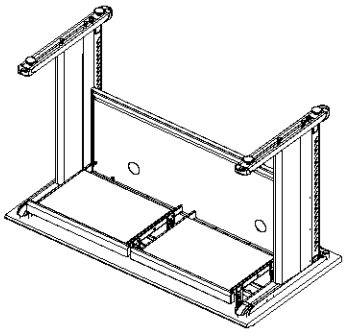

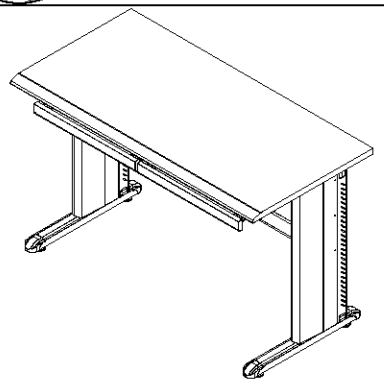

www.hefeng-furniture.com